LookOurWay
PROMOTIONAL ADVERTISING EXPERTS

15FT x 10FT ANGLED ARCH T-BASE

NOTE
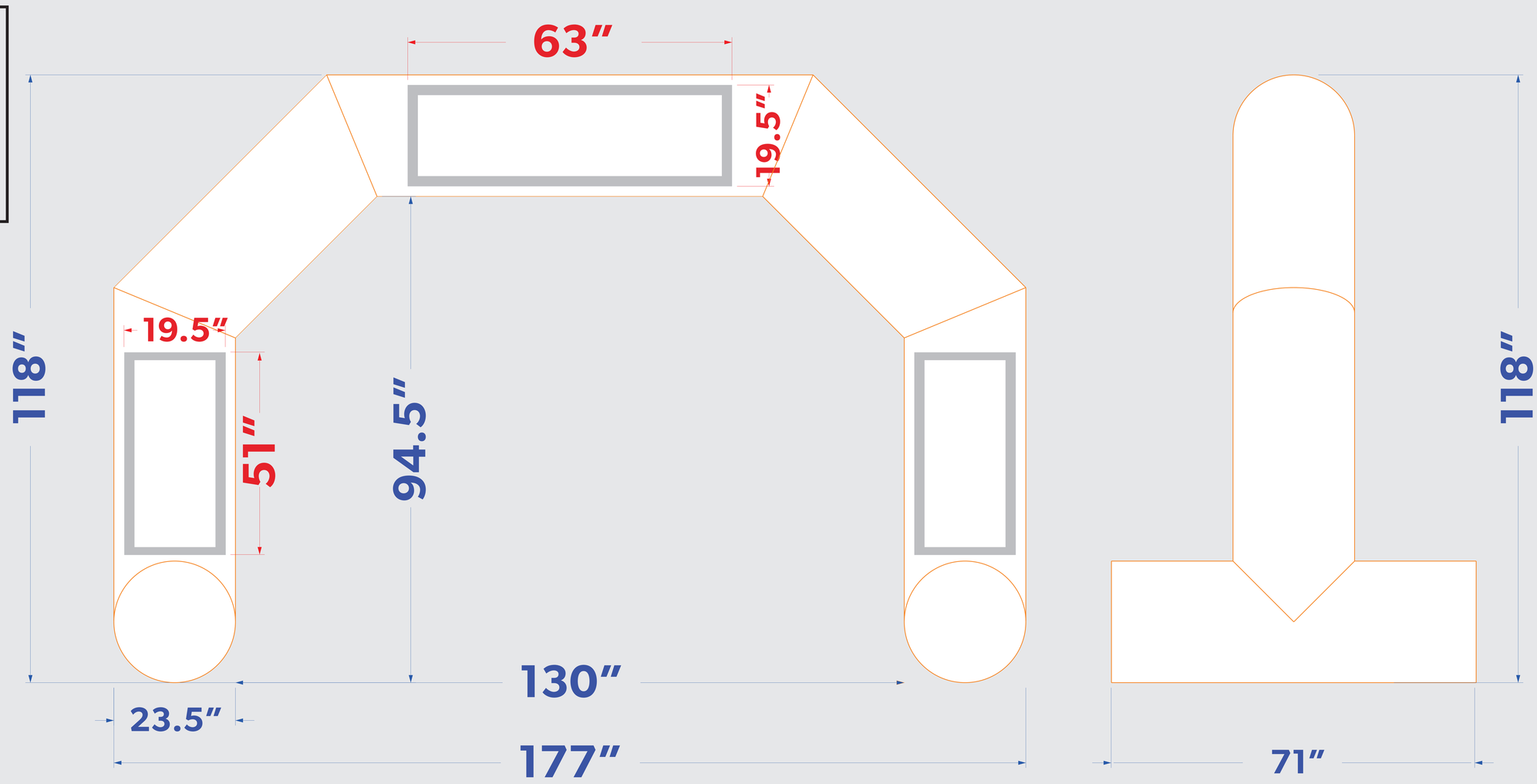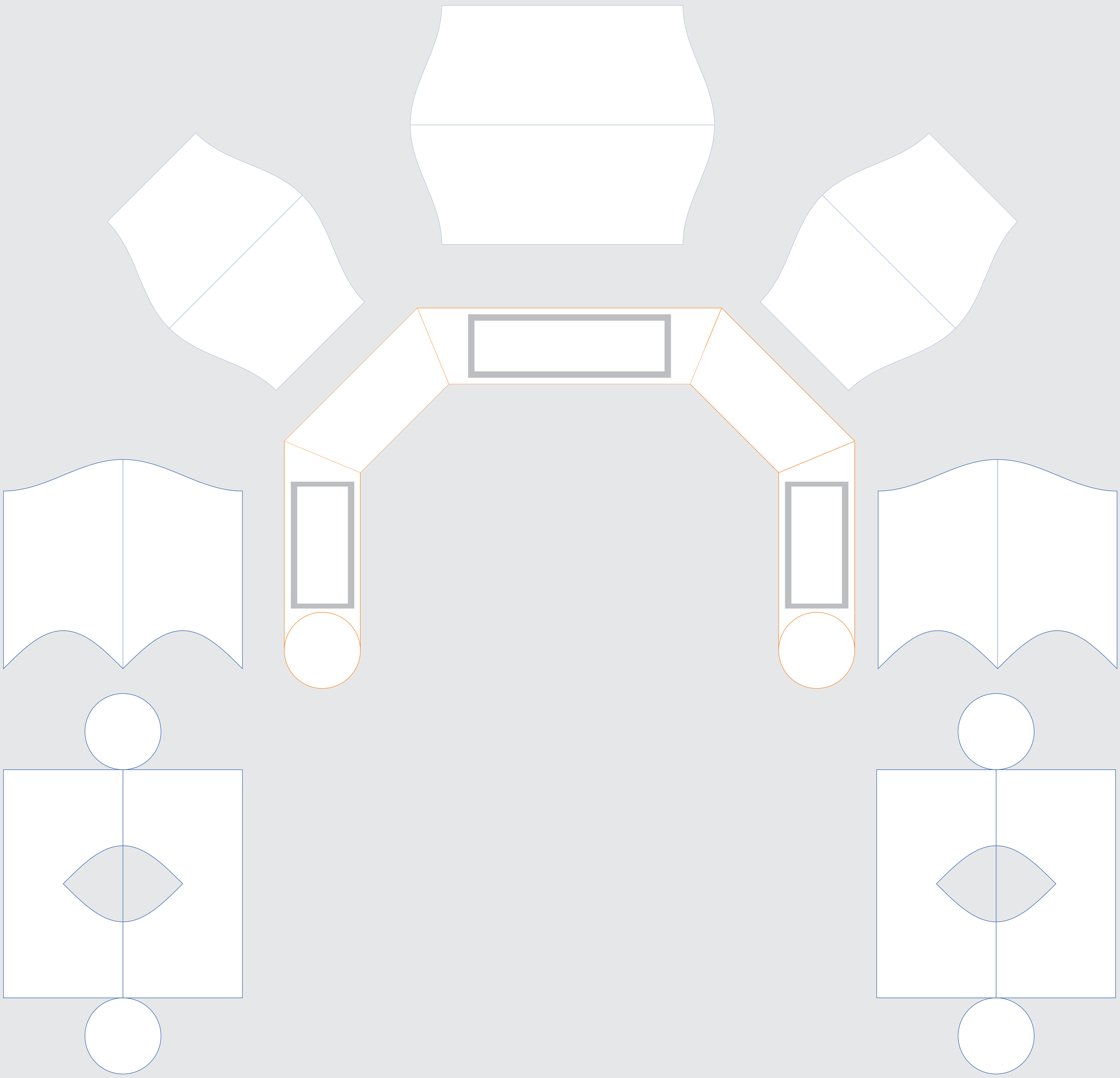
Note: this template is at 1/4 scale. Please rasterized any embedded images that are being used at 300 DPI. Save all files in CMYK color mode and note any PMS colors being used